EKB-2 EXPLODED DIAGRAM

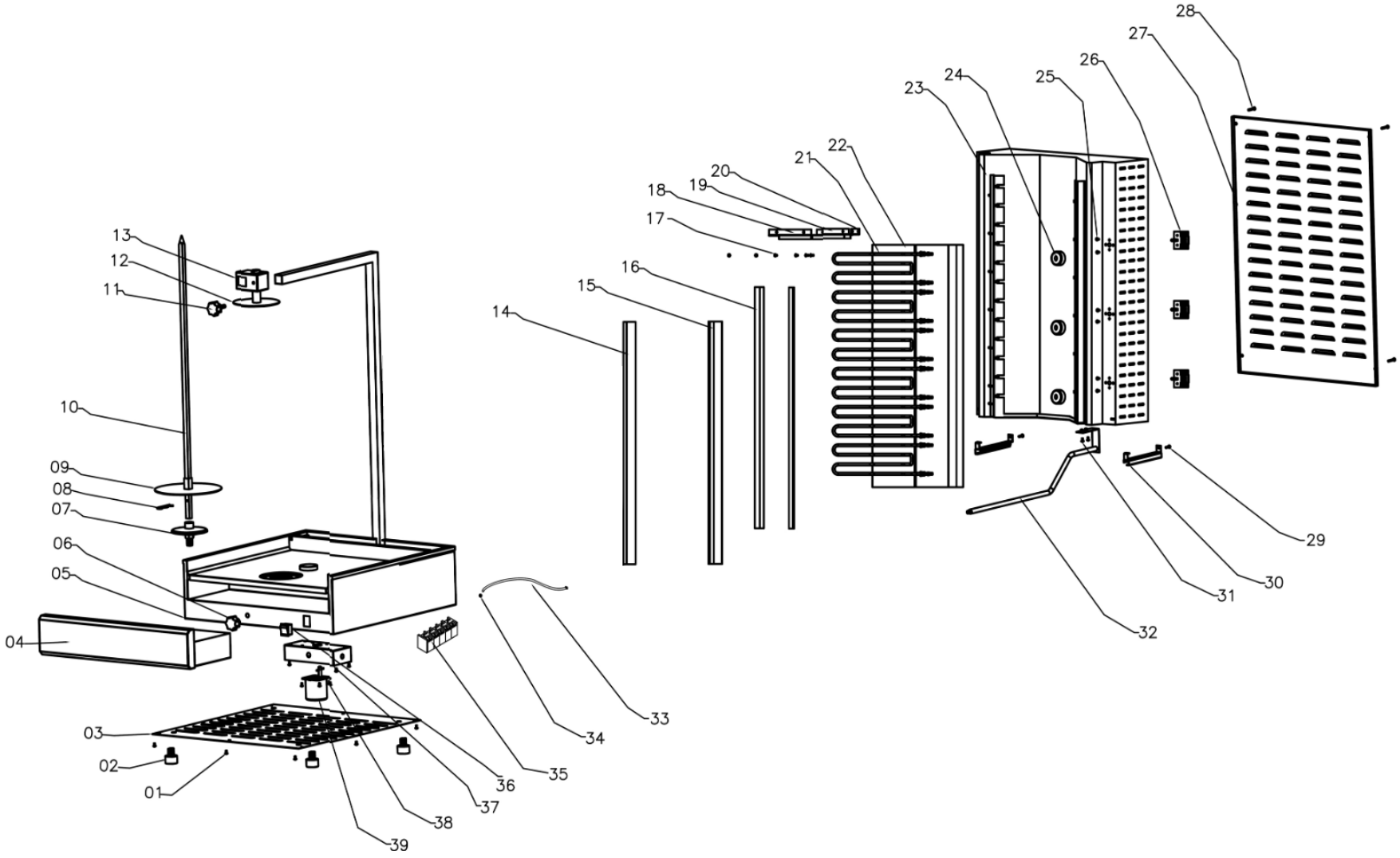

FHE After Sales Service & Support（AU）
Phone: 1300887055
Spares Email: spares@fedservices.com.au

FHE After Sales Service & Support (NZ)
Phone: 09 415 6471
Service Email: service@fedproducts.co.nz

EKB-2 PARTS LIST

Item	FHE Part Code	Description	Qty	Remark
1	70202106973	Screw M4*10	12	
2	YXD-3A-20	Rubber Foot 302090022/70200900228	4	
3		Bottom Plate 526mm X 571mm	1	
4	801005018008	Oil Tray	1	
5	801005018005	Fixed head for cable	1	
6	70200700728	Knob of Pull Rod Ø40	1	
7*	EKB-2-GBA	Grill Base Assembly Item 7 801004003006 + 70200403091L + 802023080066 X 2 + M16 Nut	1	
8*	70202000382	Main Shaft Pin	1	
9*	801004003007	Oil Partition Plate Ø191	1	
10*	70200401437	Main Shaft 12mm X 12mm	1	
11*	70200700719	Knob of Principal	1	
12	802004003008+802004003039	Upper Cover of Principal Ø130	1	
13	801005018002	Locating Box	1	
14		Left Heater Cover	1	
15		Right Heater Cover	1	
16		Pressing Strip of Ceramic Board	2	
17	70202106973	Screw M4*10	6	
18		Upper Left Ceramic Plate Press Plate	1	

FHE After Sales Service & Support（AU）
Phone: 1300887055
Spares Email: spares@fedservices.com.au

FHE After Sales Service & Support (NZ)
Phone: 09 415 6471
Service Email: service@fedproducts.co.nz

EKB-2 PARTS LIST

Item	FHE Part Code	Description	Qty	Remark
19		Upper Middle Ceramic Plate Press Plate	1	
20		Upper Right Ceramic Plate Press Plate	1	
21*	70100403146	Heater ø6.6mm 1.65kW	6	
22	70202400046	Ceramic Board 175mm X 125mm X 20mm	3	
23	802005018003	Heater Bracket	1	
24*	70101100673	Control Knob ø40	3	
25	70202106955	Screw M4 X 6mm	6	
26*	70100800437	Gear Switch	3	
27		Back Plate 721mm X 493mm X 11mm	1	
28	70202102946	Screw M5 X 20mm	4	
29	70202106973	Screw M4*10	2	
30		Slider	2	
31	801005018007	Pull Rod	1	
32	70202102773	Screw M4 X 16mm	2	
33	70100500228	Power Cord 5 X 2.5mm²	1	
34	70100700728	Power Cord Jacket PG16	1	
35*	70100700528	Terminal Block 1004A	1	
36*	DZL-28-2-110	Waterproof Switch 250V 15A 301080068/70100800682	1	

FHE After Sales Service & Support（AU）
Phone: 1300887055
Spares Email: spares@fedservices.com.au

FHE After Sales Service & Support (NZ)
Phone: 09 415 6471
Service Email: service@fedproducts.co.nz

EKB-2 PARTS LIST

Item	FHE Part Code	Description	Qty	Remark
37	802004003025	Motor Box	1	
38	70202106973	Screw M4*10	8	
39*	EKB-2-Motor	Motor 220V/50HZ 2.5RPM 70100101255+70202132019	1	
	801004003011	Heat Shield Set		
	RG-2-68A	Round Bottom Plate with Middle Bracket 20105018003/314520026		
	EKB-2-MRA	Meat Rod Assembly 801023080009+801023080010+70202000382		

*Wearable parts